PROVINCE OF THE

EASTERN CAPE

EDUCATION

DIRECTORATE: CURRICULUM FET PROGRAMMES

LESSON PLANS

TERM 3 & 4

CIVIL TECHNOLOGY

GRADE 10

FOREWORD

The following Grade 10, 11 and 12 Lesson Plans were developed by Subject Advisors during May 2009. Teachers are requested to look at them, modify them where necessary to suit their contexts and resources. It must be remembered that Lesson Plans are working documents, and any comments to improve the lesson plans in this document will be appreciated. Teachers are urged to use this document with the following departmental policy documents: Subject Statement; LPG 2008; SAG 2008; Examination Guidelines 2009 and Provincial CASS Policy / Guidelines.

Lesson planning is the duty of each and every individual teacher but it helps when teachers sometimes plan together as a group. This interaction not only helps teachers to understand how to apply the Learning Outcomes (LOs) and Assessment Standards (ASs) but also builds up the confidence of the teachers in handling the content using new teaching strategies.

It must please be noted that in order to help teachers who teach across grades and subjects, an attempt has been made to **standardise lesson plan templates** and thus the new template might not resemble the templates used in each subject during the NCS training. However, all the essential elements of a lesson plan have been retained. This change has been made to assist teachers and lighten their administrative load.

Please note that these lesson plans are to be used only as a guide to complete the requirements of the Curriculum Statements and the work schedules and teachers are encouraged to develop their own learner activities to supplement and /or substitute some of the activities given here (depending on the school environment, number and type of learners in your class, the resources available to your learners, etc).

Do not forget to build in the tasks for the Programme of Assessment into your Lesson Plans.

Strengthen your efforts by supporting each other in clusters and share ideas. Good Luck with your endeavours to improve Teaching, Learning and Assessment.

SUBJECT: CIVIL TECHNOLOGY	GRADE: 10	LESSON PLAN 1	TERM 3	TIME: 12 HOURS

CORE CONTENT: WOODWORKING
TYPES OF WOOD, SEASONING AND FINISHING

Learning Outcome 1: Technology, Society and the Environment		Learning Outcome 2: Technological Progress		Learning Outcome 3: Knowledge and Understanding		Learning Outcome 4: Application of Knowledge	
10.1.1 Describe the interrelationship between technology, society and the environment.		10.2.1 Identify, investigate, define and analyse problems in a given real-life situation.		10.3.1 Describe the impact of the Occupational Health and Safety Act (OHS Act) on personal safety		10.4.1 Apply relevant safety measures in accordance with the Occupational Health and Safety Act	
10.1.2 Describe human rights issues.		10.2.2 Generate and/or design possible solutions for problems.		10.3.2 Describe the properties and the use of materials in the built environment.		10.4.2 Calculate quantities and evaluate properties of materials used in the built environment.	
10.1.3 Describe, explain and respond to basic medical emergencies in context, taking cognizance of health issues such as HIV/Aids.		10.2.3 Make or improve products according to the selected design.		10.3.3 Describe the function, use and care of basic tools and equipment.	X	10.4.3 Identify and use hand tools and power tools.	X
10.1.4 Identify indigenous knowledge systems of different cultures.	X	10.2.4 Evaluate the product against the initial design.	X	10.3.4 Show knowledge of freehand sketching and the use of instruments for basic drawings, with an introduction to CAD.		10.4.4 Make a basic drawing using freehand sketching and instruments and perform basic CAD commands.	
10.1.5 Describe entrepreneurship and its influence on society and the environment.		10.2.5 Present assignments by means of a variety of communication media.		10.3.5 Demonstrate an understanding of applicable terminology.		10.4.5 Apply the correct use of terminology in Civil Technology.	
				10.3.6 Distinguish between the different types of forces found in load-bearing structures.		10.4.6 Perform simple tests to show the effects of different types of forces acting on load-bearing structures.	
				10.3.7 List different manufacturing processes or construction methods.	X	10.4.7 Apply different construction methods.	X
				10.3.8 Explain civil services.		10.4.8 Demonstrate the functions of civil services.	
				10.3.9		10.4.9	

				Identify quantities of materials for a small project.		Calculate quantities of materials for a small project.	
				10.3.10 Explain the uses of different joining applications (methods).		10.4.10 Use various methods to join materials.	
TEACHER ACTIVITIES		**LEARNER ACTIVITIES**		**RESOURCES**		**ASSESSMENT**	**DATE COMPLETED**
Discuss types of timber used in the building industry (Softwood and Hardwood).		Learners will participate by answering questions about softwood and hardwood.		Textbooks (page 98 of work with civil Technology, first edition, 2007). A piece of log of wood.		Self, group, teacher, by using rubrics and activity sheet. To assess knowledge and understanding of wood used in the building industry.	
Explain the physical characteristics of softwood and hardwood.		Identify the physical characteristics of softwood and hardwood trees.				To assess knowledge and understanding of methods of seasoning timber.	
Explain the parts of the tree by sketching the cross-section of a tree on the chalkboard and labeling the parts.		Identify the parts of the tree as seen from the cross section.					
Discuss the properties of wood used in the building industry.		Identify the properties of wood used in the building industry.					
Explain the term **"seasoning of timber".** Teacher will demonstrate the method of stacking boards for seasoning.		Learners will participate in the demonstration by arranging the boards as directed by the teacher.					
Discuss advantages of seasoned timber over unseasoned timber.		Identify the advantages of seasoned timber over unseasoned timber.					
Explain the methods of seasoning timber. **1. Natural seasoning** **2. Artificial seasoning**		Identify the methods of seasoning timber. 1.**Natural seasoning** 2.**Artificial seasoning**					
Discuss the advantages and disadvantages of natural seasoning.		Learners will participate in discussion by answering questions posed be the teacher.					
Explain the advantages and disadvantages of artificial seasoning		Learners will answer questions about advantages and disadvantages of artificial seasoning and write notes					
Homework:							
Enrichment/Expanded Opportunities							
Teacher Reflections:							

SIGNATURES:

_____	_____	_____	_____
TEACHER	DATE	HOD / SMT	DATE

SUBJECT: CIVIL TECHNOLOGY	GRADE: 10	LESSON PLAN 2	TERM 3	TIME: 12 HOURS

CORE CONTENT: WOODWORKING
TOOLS, SAFETY AND INTREPRENEURSHIP

LEARNING OUTCOME 1: Technology, Society and the Environment		LEARNING OUTCOME 2: Technological Process		LEARNING OUTCOME 3: Knowledge and Understanding.		LEARNING OUTCOME 4: Application of Knowledge	
10.1.1 Describe the interrelationship between technology, society and the environment.	X	10.2.1 Identify, investigate, define and analyse problems in a given real-life situation.		10.3.1 Describe the impact of the Occupational Health and Safety Act (OHS Act) on personal safety		10.4.1 Apply relevant safety measures in accordance with the Occupational Health and Safety Act	
10.1.2 Describe human rights issues.		10.2.2 Generate and/or design possible solutions for problems.		10.3.2 Describe the properties and the use of materials in the built environment.	X	10.4.2 Calculate quantities and evaluate properties of materials used in the built environment.	
10.1.3 Describe, explain and respond to basic medical emergencies in context, taking cognizance of health issues such as HIV/Aids.		10.2.3 Make or improve products according to the selected design.		10.3.3 Describe the function, use and care of basic tools and equipment.		10.4.3 Identify and use hand tools and power tools.	
10.1.4 Identify indigenous knowledge systems of different cultures.		10.2.4 Evaluate the product against the initial design.		10.3.4 Show knowledge of freehand sketching and the use of instruments for basic drawings, with an introduction to CAD.		10.4.4 Make a basic drawing using freehand sketching and instruments and perform basic CAD commands.	
10.1.5 Describe entrepreneurship and its influence on society and the environment.	X	10.2.5 Present assignments by means of a variety of communication media.		10.3.5 Demonstrate an understanding of applicable terminology.		10.4.5 Apply the correct use of terminology in Civil Technology.	
				10.3.6 Distinguish between the different types of forces found in load-bearing structures.		10.4.6 Perform simple tests to show the effects of different types of forces acting on load-bearing structures.	
				10.3.7 List different manufacturing processes or construction methods.		10.4.7 Apply different construction methods.	
				10.3.8		10.4.8	

				Explain civil services.		Demonstrate the functions of civil services.	
				10.3.9 Identify quantities of materials for a small project.		10.4.9 Calculate quantities of materials for a small project.	
				10.3.10 Explain the uses of different joining applications (methods).		10.4.10 Use various methods to join materials.	

TEACHER ACTIVITIES	LEARNER ACTIVITIES	RESOURCES	ASSESSMENT	
Teacher will: Ask the learners to state any woodworking hand and power tools that they know.	Learners will answer by stating the woodworking hand tools and power tools that they know. Learners will write notes	Textbook	By means of tests. Educator peer assessment.	
Teacher will write the names of the tools on the chalkboard as the learners mention them.	Write	The actual woodworking hand and power tools for demonstration.		
Will show the tools to the learners and assist learners to identify the parts of the tools.	Observe the tools and identify the parts.	Pamphlets with pictures of woodworking tools,		
Discuss the specific uses of each tool with learners.	Learners will participate by stating the uses of the tools and writing notes.			
Demonstrate the correct way of handling the tools.				
Discuss the care of the tools with learners.				
Visit hardware to compare the tools.				
Learners to write notes on the safety of hand-tools.				
Evaluate and carry out remedial work				
Homework:				
Enrichment/Expanded Opportunities:				
Teacher Reflections:				

SIGNATURES:

_____	_____	_____	_____
TEACHER	DATE	HOD / SMT	DATE

SUBJECT: CIVIL TECHNOLOGY	GRADE: 10	LESSON PLAN 3	TERM 4	TIME: 8 HOURS

CORE CONTENT: CIVIL SERVICES
Water Supply(Cold and Hot Water)

LEARNING OUTCOME 1: Technology, Society and the Environment		LEARNING OUTCOME 2: Technological Process		LEARNING OUTCOME 3: Knowledge and Understanding.		LEARNING OUTCOME 4: Application of Knowledge	
10.1.1 Describe the interrelationship between technology, society and the environment.		10.2.1 Identify, investigate, define and analyse problems in a given real-life situation.		10.3.1 Describe the impact of the Occupational Health and Safety Act (OHS Act) on personal safety.		10.4.1 Apply relevant safety measures in accordance with the Occupational Health and Safety Act.	
10.1.2 Describe human rights issues.		10.2.2 Generate and/or design possible solutions for problems.		10.3.2 Describe the properties and the use of materials in the built environment.		10.4.2 Calculate quantities and evaluate properties of materials used in the built environment.	
10.1.3 Describe, explain and respond to basic medical emergencies in context, taking cognisance of health issues such as HIV/Aids.		10.2.3 Make or improve products according to the selected design.		10.3.3 Describe the function, use and care of basic tools and equipment.		10.4.3 Identify and use hand tools and power tools.	
10.1.4 Identify indigenous knowledge systems of different cultures.		10.2.4 Evaluate the product against the initial design.		10.3.4 Show knowledge of freehand sketching and the use of instruments for basic drawings, with an introduction to CAD.		10.4.4 Make a basic drawing using freehand sketching and instruments and perform basic CAD commands.	
10.1.5 Describe entrepreneurship and its influence on society and the environment.		10.2.5 Present assignments by means of a variety of communication media.		10.3.5 Demonstrate an understanding of applicable terminology.		10.4.5 Apply the correct use of terminology in Civil Technology.	
				10.3.6 Distinguish between the different types of forces found in load-bearing structures.		10.4.6 Perform simple tests to show the effects of different types of forces acting on load-bearing structures.	
				10.3.7 List different manufacturing processes or construction methods.		10.4.7 Apply different construction methods.	
				10.3.8 Explain civil services.	X	10.4.8 Demonstrate the functions of	X

						civil services.	
				10.3.9 Identify quantities of materials for a small project		10.4.9 Calculate quantities of materials for a small project.	
				10.3.10 Explain the uses of different joining applications (methods).		10.4.10 Use various methods to join materials.	
TEACHER ACTIVITIES		**LEARNER ACTIVITIES**		**RESOURCES**		**ASSESSMENT**	**DATE COMPLETED**
Using a data projector the teacher presents a diagram showing an overview of water collection in a community.(Refer Diagram A) Asks questions on how people obtain cold water in the taps inside their houses. How does the water become hot?		Answer questions based on their general knowledge.		Data projector , Pamphlets,		Class work : Label the service point shown in the diagram.(DIAGRAM D)	
Explains in details how the water is gravitated from the dams and purified before it is distributed to the service reservoir.(Refer Diagram B)		Interact with the presentation by asking questions.					
Explains how the geyser works referring to the diagram presented. (Refer Diagram C)		Write in full the abbreviations used on the Diagram.					
Homework:							
Enrichment/Expanded Opportunities:							
Teacher Reflections:							

DIAGRAM A

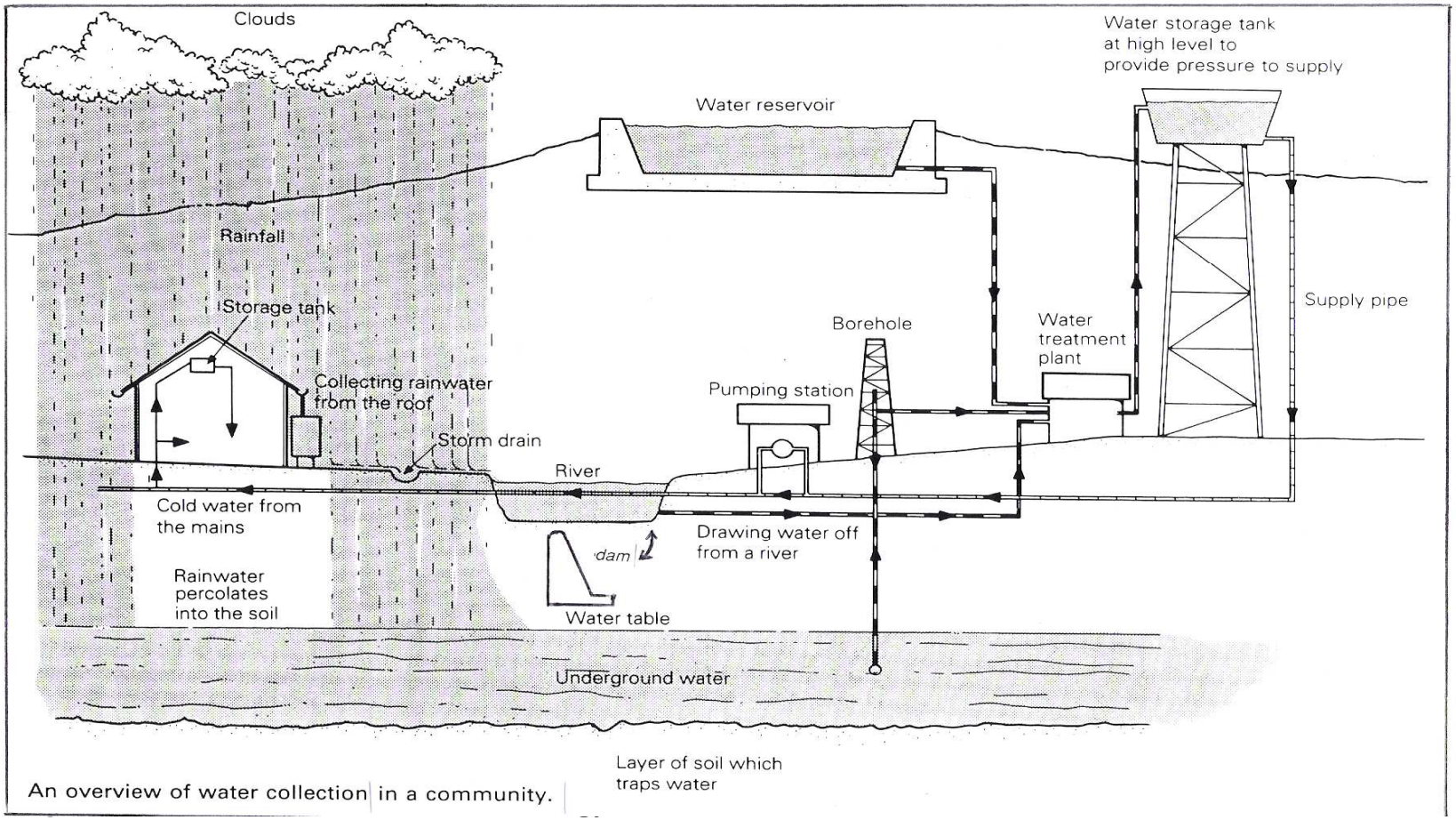

An overview of water collection in a community.

DIAGRAM B

PURIFICATION OF WATER

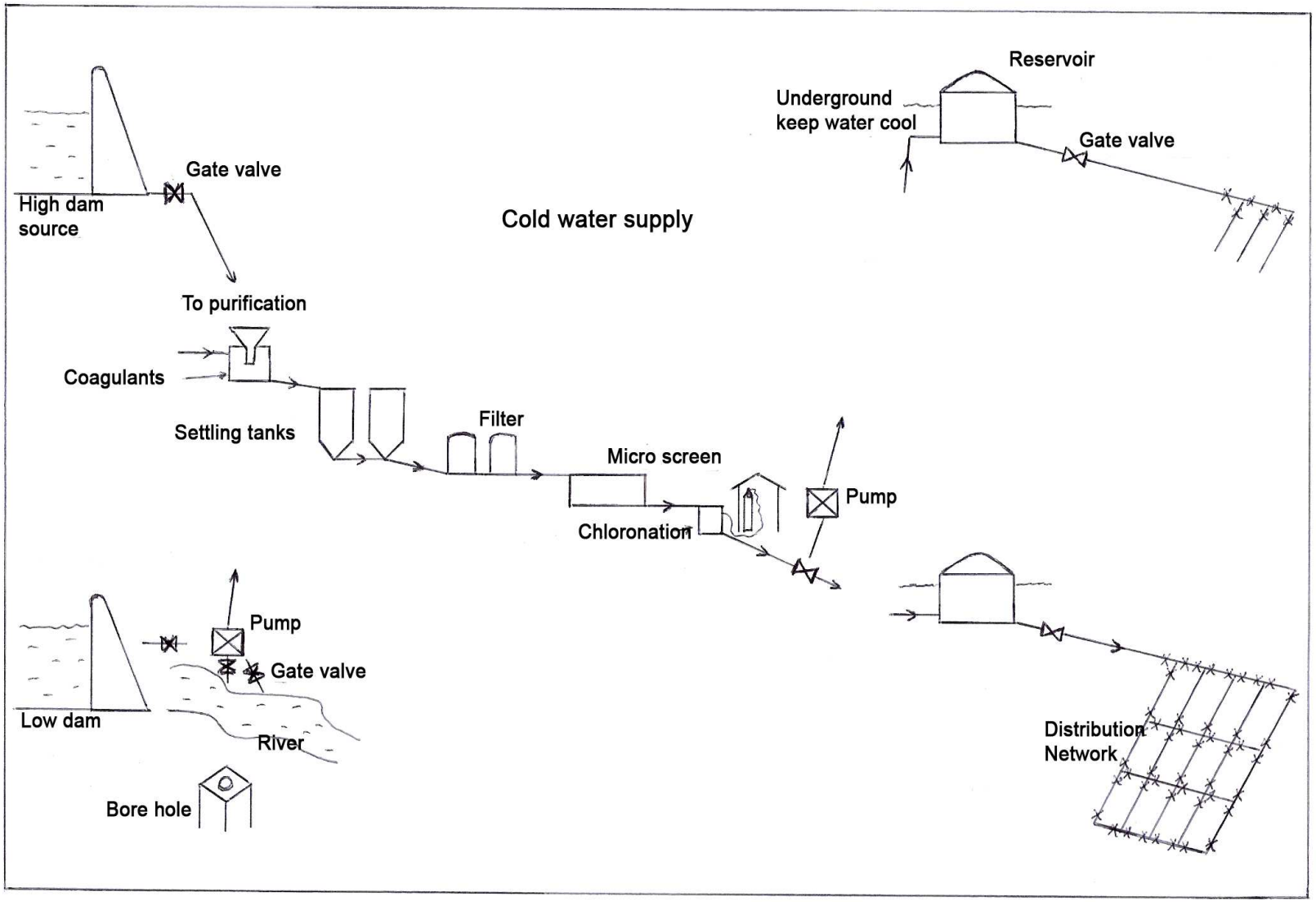

DIAGRAM C

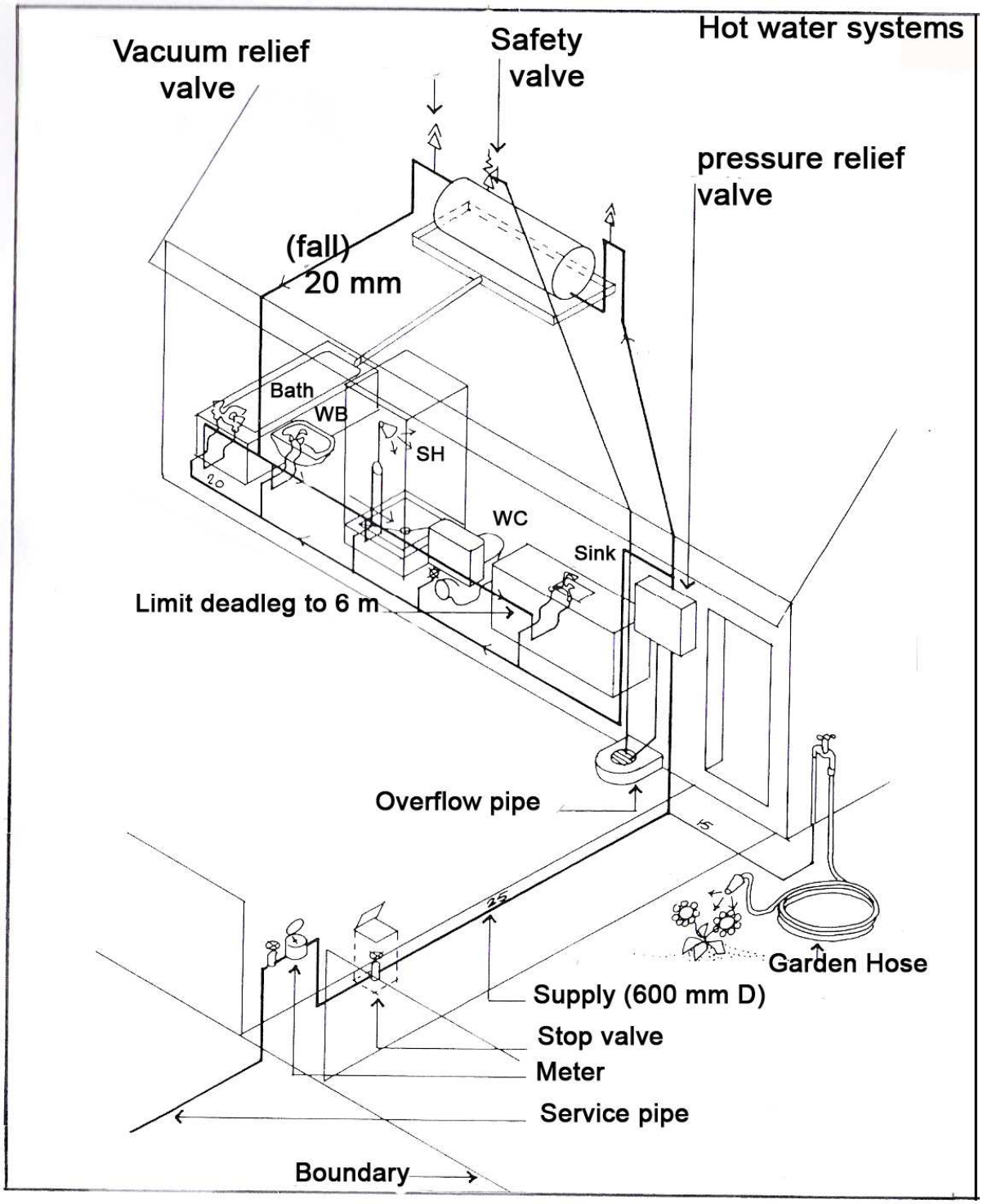
Hot water systems
Vacuum relief valve
Safety valve
pressure relief valve
(fall)
20 mm
Bath
WB
SH
WC
Sink
Limit deadleg to 6 m
Overflow pipe
Garden Hose
Supply (600 mm D)
Stop valve
Meter
Service pipe
Boundary

DIAGRAM D

CLASSWORK

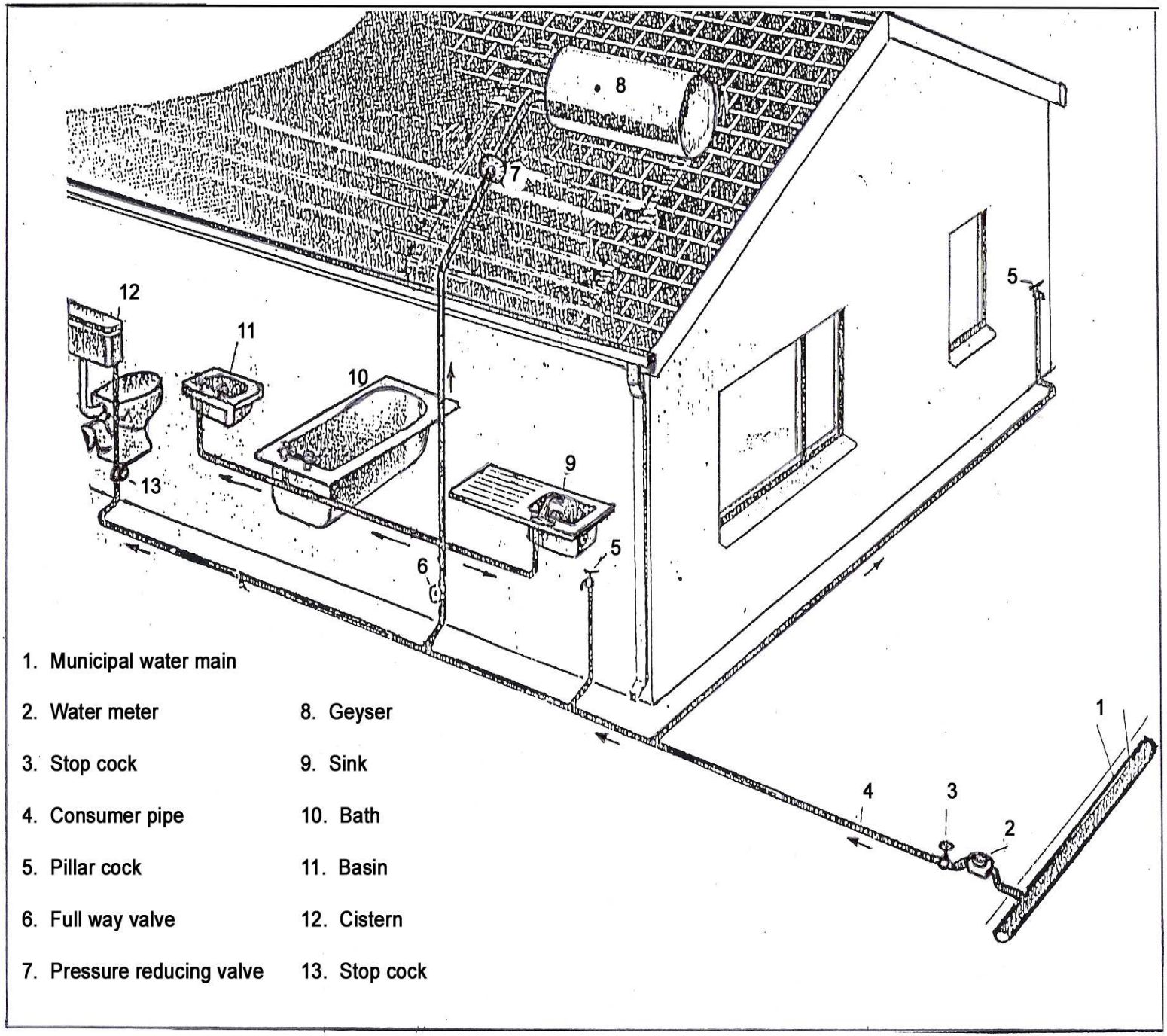

SUBJECT: CIVIL TECHNOLOGY	GRADE: 10	LESSON PLAN 4	TERM 4	TIME: 8 HOURS

CORE CONTENT: CIVIL SERVICES
Sewage and Plumbing

LEARNING OUTCOME 1: Technology, Society and the Environment		LEARNING OUTCOME 2: Technological Process		LEARNING OUTCOME 3: Knowledge and Understanding.		LEARNING OUTCOME 4: Application of Knowledge	
10.1.1 Describe the interrelationship between technology, society and the environment.		10.2.1 Identify, investigate, define and analyse problems in a given real-life situation.		10.3.1 Describe the impact of the Occupational Health and Safety Act (OHS Act) on personal safety.		10.4.1 Apply relevant safety measures in accordance with the Occupational Health and Safety Act.	
10.1.2 Describe human rights issues.		10.2.2 Generate and/or design possible solutions for problems.		10.3.2 Describe the properties and the use of materials in the built environment.		10.4.2 Calculate quantities and evaluate properties of materials used in the built environment.	
10.1.3 Describe, explain and respond to basic medical emergencies in context, taking cognisance of health issues such as HIV/Aids.		10.2.3 Make or improve products according to the selected design.		10.3.3 Describe the function, use and care of basic tools and equipment.		10.4.3 Identify and use hand tools and power tools.	
10.1.4 Identify indigenous knowledge systems of different cultures.		10.2.4 Evaluate the product against the initial design.		10.3.4 Show knowledge of freehand sketching and the use of instruments for basic drawings, with an introduction to CAD.		10.4.4 Make a basic drawing using freehand sketching and instruments and perform basic CAD commands.	
10.1.5 Describe entrepreneurship and its influence on society and the environment.		10.2.5 Present assignments by means of a variety of communication media.		10.3.5 Demonstrate an understanding of applicable terminology.		10.4.5 Apply the correct use of terminology in Civil Technology.	
				10.3.6 Distinguish between the different types of forces found in load-bearing structures.		10.4.6 Perform simple tests to show the effects of different types of forces acting on load-bearing structures.	
				10.3.7 List different manufacturing processes or construction methods.		10.4.7 Apply different construction methods.	
				10.3.8 Explain civil services.	X	10.4.8 Demonstrate the functions of	X

						civil services.	
				10.3.9 Identify quantities of materials for a small project.		10.4.9 Calculate quantities of materials for a small project.	
				10.3.10 Explain the uses of different joining applications (methods).		10.4.10 Use various methods to join materials.	
TEACHER ACTIVITIES		**LEARNER ACTIVITIES**		**RESOURCES**		**ASSESSMENT**	**DATE COMPLETED**
Asks learners where water that is used inside the houses drain to? Distribute the pamphlets with diagram showing waste water drained from a house to a public sewer.(DIAGRAM A)		Answer questions		Pamphlets , Projector,		Question and Answer Class work	
Explains the term 'SEWAGE'							
Explains the terms used in drainage: Drain, Gully, Manhole, Trap, Vent pipe, Public sewer.		Write notes on the terms.					
Explains the principles of soil drainage							
Homework:							
Enrichment/Expanded Opportunities:							
Teacher Reflections:							

SIGNATURES:

_____	_____	_____	_____
TEACHER	DATE	HOD / SMT	DATE

DIAGRAM A

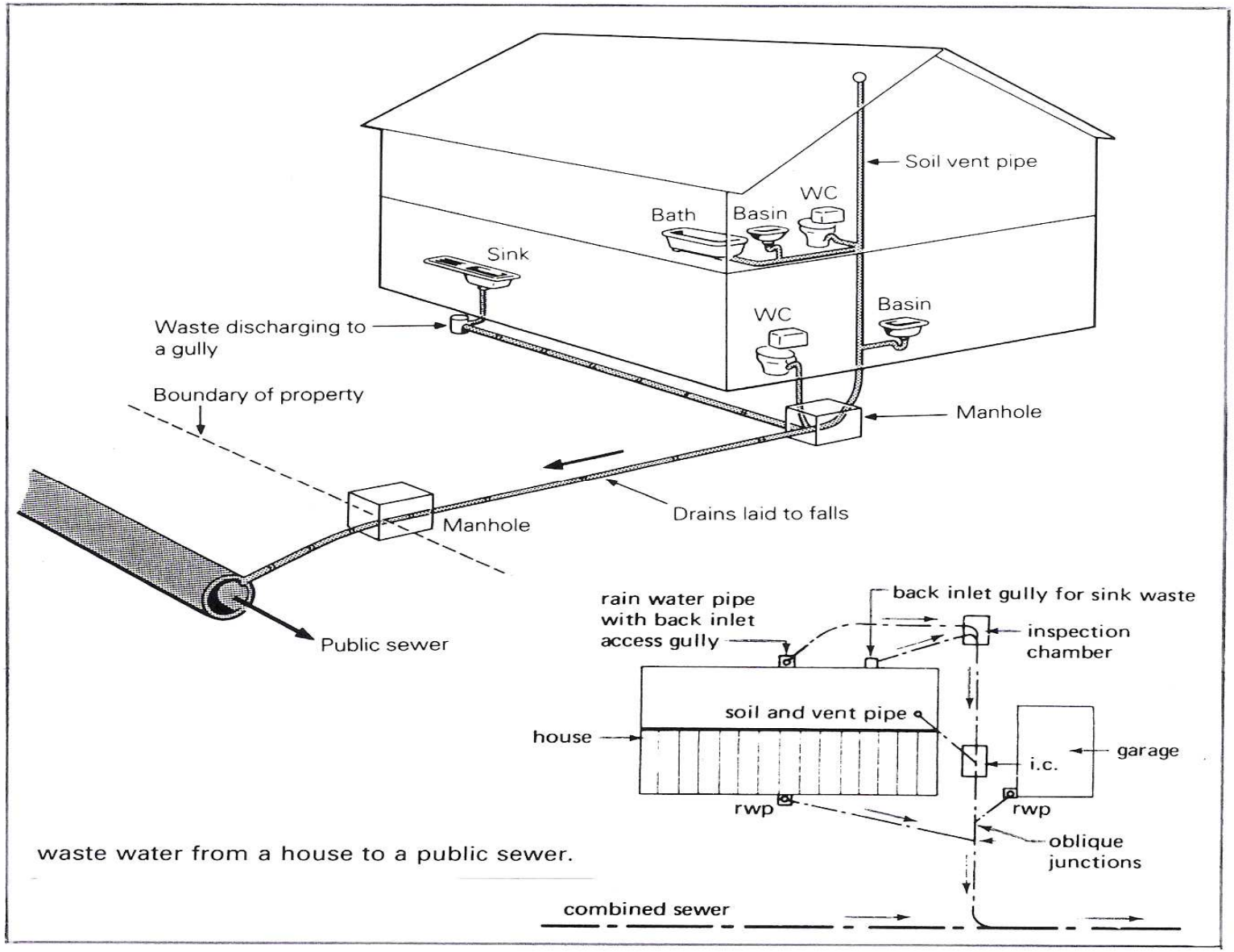

waste water from a house to a public sewer.

SUBJECT: CIVIL TECHNOLOGY	GRADE: 10	LESSON PLAN 5	TERM 4	TIME: 8 HOURS

CORE CONTENT: CIVIL SERVICES
Storm water

LEARNING OUTCOME 1: Technology, Society and the Environment		LEARNING OUTCOME 2: Technological Process		LEARNING OUTCOME 3: Knowledge and Understanding.		LEARNING OUTCOME 4: Application of Knowledge	
10.1.1 Describe the interrelationship between technology, society and the environment.		10.2.1 Identify, investigate, define and analyse problems in a given real-life situation.		10.3.1 Describe the impact of the Occupational Health and Safety Act (OHS Act) on personal safety.		10.4.1 Apply relevant safety measures in accordance with the Occupational Health and Safety Act.	
10.1.2 Describe human rights issues.		10.2.2 Generate and/or design possible solutions for problems.		10.3.2 Describe the properties and the use of materials in the built environment.		10.4.2 Calculate quantities and evaluate properties of materials used in the built environment.	
10.1.3 Describe, explain and respond to basic medical emergencies in context, taking cognisance of health issues such as HIV/Aids.		10.2.3 Make or improve products according to the selected design.		10.3.3 Describe the function, use and care of basic tools and equipment.		10.4.3 Identify and use hand tools and power tools.	
10.1.4 Identify indigenous knowledge systems of different cultures.		10.2.4 Evaluate the product against the initial design.		10.3.4 Show knowledge of freehand sketching and the use of instruments for basic drawings, with an introduction to CAD.		10.4.4 Make a basic drawing using freehand sketching and instruments and perform basic CAD commands.	
10.1.5 Describe entrepreneurship and its influence on society and the environment.		10.2.5 Present assignments by means of a variety of communication media.		10.3.5 Demonstrate an understanding of applicable terminology.		10.4.5 Apply the correct use of terminology in Civil Technology.	
				10.3.6 Distinguish between the different types of forces found in load-bearing structures.		10.4.6 Perform simple tests to show the effects of different types of forces acting on load-bearing structures.	
				10.3.7 List different manufacturing processes or construction methods.		10.4.7 Apply different construction methods.	
				10.3.8 Explain civil services.	X	10.4.8 Demonstrate the functions of	X

						civil services.	
				10.3.9 Identify quantities of materials for a small project.		10.4.9 Calculate quantities of materials for a small project.	
				10.3.10 Explain the uses of different joining applications. (methods).		10.4.10 Use various methods to join materials.	

TEACHER ACTIVITIES	LEARNER ACTIVITIES	RESOURCES	ASSESSMENT	DATE COMPLETED
The educator distributes the notes on storm water.		Data projector , Hand outs,	Class work ,	
Displays on the projector the diagram showing an overview of rainwater disposal.(DIAGRAM A)	The learners are divided into groups and asked to express their understanding on the arrows reflected on the diagram.			
Interact with the learners answers explains what is storm water.				
Explains the types of pipe materials used (PVC , Fibre Cement , Zinc and Concrete)	Distinguish amongst the materials used which is the best used.			
Homework:				
Enrichment/Expanded Opportunities: : Research the building regulations concerning disposal of sewer flow.				
Teacher Reflections: Revise and do remedial work.				

SIGNATURES:

_____	_____	_____	_____
TEACHER	DATE	HOD / SMT	DATE

DIAGRAM A

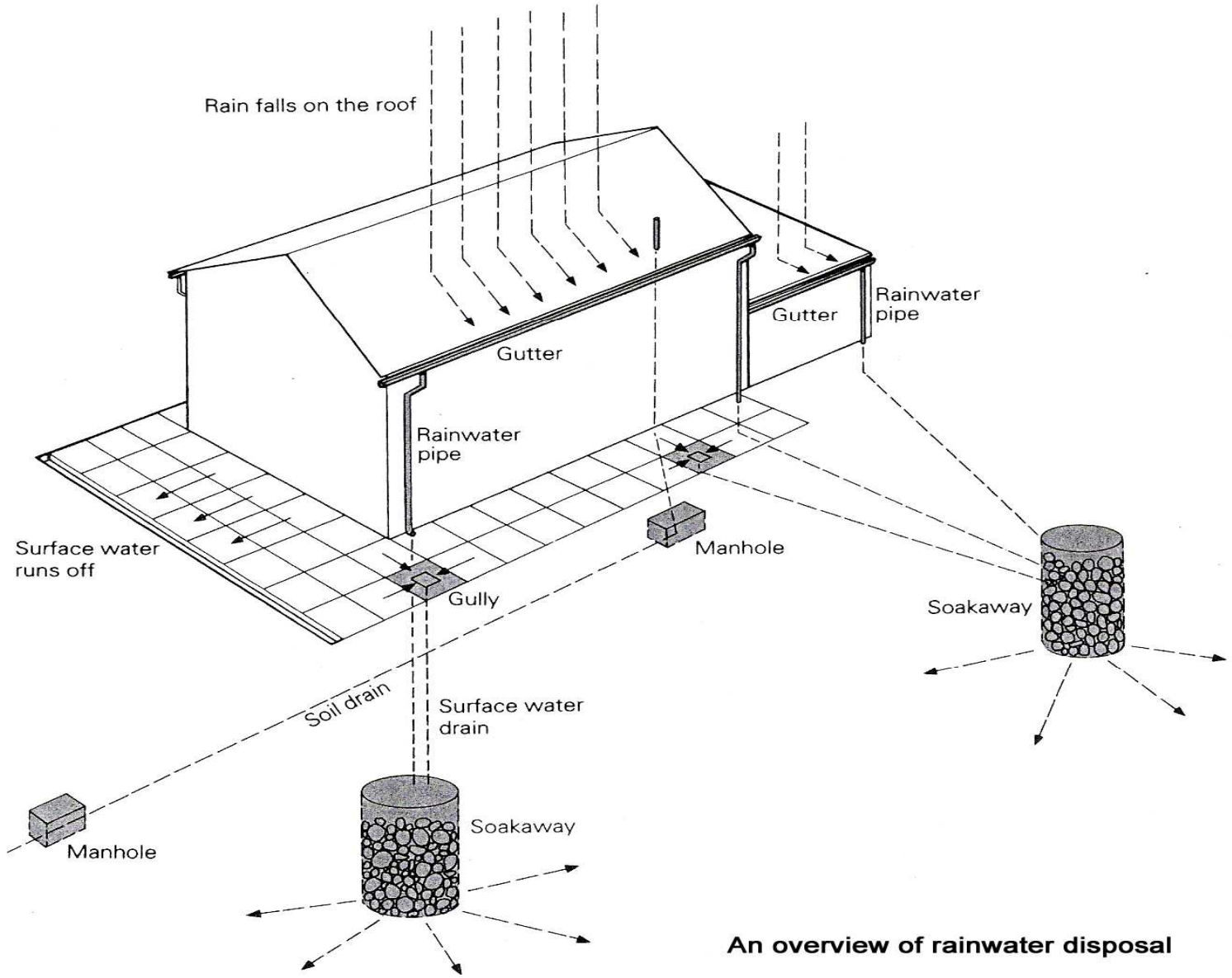

An overview of rainwater disposal

SUBJECT: CIVIL TECHNOLOGY	GRADE: 10	LESSON PLAN 6	TERM 4	TIME: 8 HOURS

CORE CONTENT: CIVIL SERVICES
Electrical Systems

LEARNING OUTCOME 1: Technology**, Society and the Environment**		**LEARNING OUTCOME 2: Technological Process**		**LEARNING OUTCOME 3: Knowledge and Understanding.**		**LEARNING OUTCOME 4: Application of Knowledge**	
10.1.1 Describe the interrelationship between technology, society and the environment.		10.2.1 Identify, investigate, define and analyse problems in a given real-life situation.		10.3.1 Describe the impact of the Occupational Health and Safety Act (OHS Act) on personal safety.		10.4.1 Apply relevant safety measures in accordance with the Occupational Health and Safety Act.	
10.1.2 Describe human rights issues.		10.2.2 Generate and/or design possible solutions for problems.		10.3.2 Describe the properties and the use of materials in the built environment.		10.4.2 Calculate quantities and evaluate properties of materials used in the built environment.	
10.1.3 Describe, explain and respond to basic medical emergencies in context, taking cognisance of health issues such as HIV/Aids.		10.2.3 Make or improve products according to the selected design		10.3.3 Describe the function, use and care of basic tools and equipment.		10.4.3 Identify and use hand tools and power tools.	
10.1.4 Identify indigenous knowledge systems of different cultures.		10.2.4 Evaluate the product against the initial design.		10.3.4 Show knowledge of freehand sketching and the use of instruments for basic drawings, with an introduction to CAD.		10.4.4 Make a basic drawing using freehand sketching and instruments and perform basic CAD commands.	
10.1.5 Describe entrepreneurship and its influence on society and the environment.		10.2.5 Present assignments by means of a variety of communication media.		10.3.5 Demonstrate an understanding of applicable terminology.		10.4.5 Apply the correct use of terminology in Civil Technology.	
				10.3.6 Distinguish between the different types of forces found in load-bearing structures.		10.4.6 Perform simple tests to show the effects of different types of forces acting on load-bearing structures.	
				10.3.7 List different manufacturing processes or construction methods.		10.4.7 Apply different construction methods.	

				10.3.8 Explain civil services.	X	10.4.8 Demonstrate the functions of civil services.	X
				10.3.9 Identify quantities of materials for a small project.		10.4.9 Calculate quantities of materials for a small project.	
				10.3.10 Explain the uses of different joining applications.(methods).		10.4.10 Use various methods to join materials.	

TEACHER ACTIVITIES	LEARNER ACTIVITIES	RESOURCES	ASSESSMENT	DATE COMPLETED
The educator asks learners ,their understanding of the direct current (DC) and alternating current (AC) based on their knowledge from physical sciences.	Answer questions	Data Projector , Handouts , Chalkboard ,	Task list Assignment:: Research the electrical regulations in wiring of premises as per the Code of Practice 0142	
Explains the purpose of electrical systems.	Interact with presentation by asking questions.			
Hand out the notes on the switches used, sockets and plugs used in electrical. (Refer Diagram A)				
Homework:				
Enrichment/Expanded Opportunities:				
Teacher Reflections:				

SIGNATURES:

_____	_____	_____	_____
TEACHER	DATE	HOD / SMT	DATE

DIAGRAM A

FLUSH WALL SWITCHES - 16A - TO FIT 100 x 50 mm or 100 x 100 mm WALL BOXES

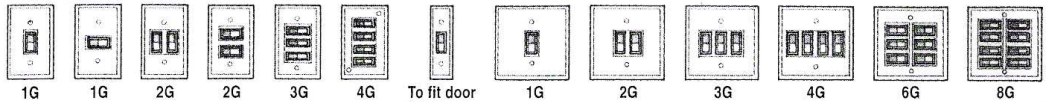

1G 1G 2G 2G 3G 4G To fit door frame 1G 2G 3G 4G 6G 8G

FLUSH WALL SOCKETS - 5A or 16A - TO FIT 100 x 50 mm or 100 x 100 mm WALL BOXES

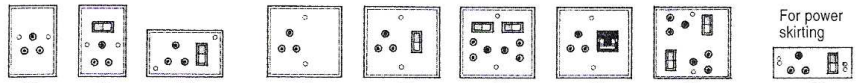

P1 P2 P3 P4 P5 P6 P7 P8 P9

For power skirting

CEILING PULL-SWITCH

FLUSH WALL DIMMER SWITCHES - 500 to 1000 W - TO FIT 100 x 50 mm or 100 x 100 mm WALL BOXES

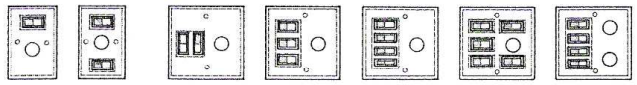

D1 D2 D3 D4 D5 D6 D7

NOTE: "G" denotes gang switches obtainable in 1 or 2 - way. All sockets must be shuttered. Cover plates are obtainable in metal or plastics and in various colours. Isolator sizes are the same as for switches 100 x 50 mm or 100 x 100 mm. Consult your supplier for more information.

INDUSTRIAL / SURFACE MOUNTED SWITCHES - SIZES 70 X 70 mm or 119 x 83 mm

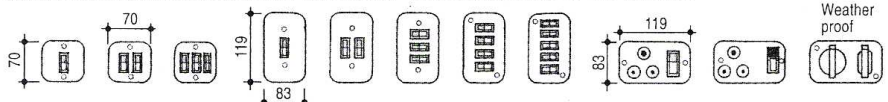

S1 S2 S3 S4 S5 S6 S7 S8 S9 S10 S11

PLUGS & PLUG SOCKETS

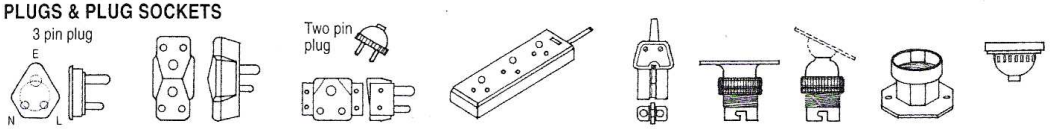

Viewed from cover side | 3 pin plug double adaptor | 2 & 3 pin Multi-adaptor | Multi plug adaptor | Connector plug | Batten holder | Batten holder | E.S. Lamp holder | Ceiling rose

ELECTRICAL CABLES	Bare copper wire	Single cable	Twin Ripcord	Flexible wire cables	Cotton covered Flex	Flat cable	Flat cable	Unarmoured cable	Armoured Power Cable 600/1000 V	Armoured Power Cable 1900/3300 V
Electrical Cables	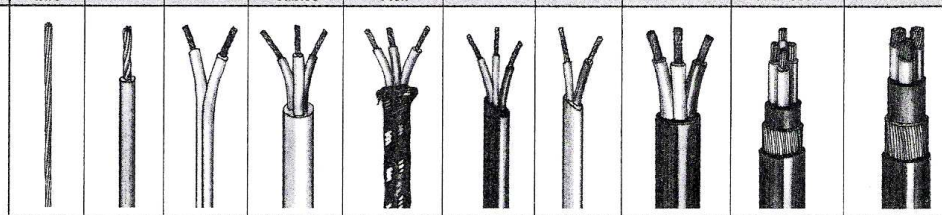									
Cores	-	1	2	2 to 7	2 to 3	3	2	2 to 4	3 to 4	4 to 7
Cross Section	1,5 - 185 mm²	1,0 - 630 mm²	0,2 - 1,5 mm²	0,5 - 4,0 mm²	0,75 - 1,5 mm²	1 - 16 mm²	1 - 16 mm²	1,5 - 6 mm²	1,5 - 120 mm²	
Diameter	1,5 - 185 mm2	2,7 - 38 mm	3,14 x 1,6 to 6,2 x 3,1 mm	5,2 - 12 mm	4,5 - 6,0 mm	4,5 x 8,3 to 10,4 x 21,3 mm	4 - 9 mm	9 - 15 mm	17 - 30 mm	20 - 80 mm
Amps		17 - 900	5 - 16	5 - 30	6 - 15	16 - 85	16 - 85	15 - 34	15 - 220	15 - 395
Coil length	Coils	100 m	100 m	100 m	100 m	100 m	100 m	Coils	Coils	Coils

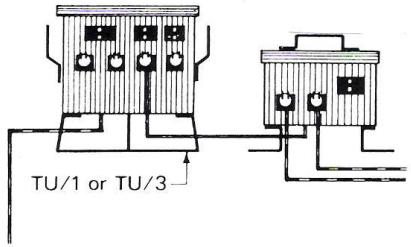

Transformers